mmWave Dual-Beam Phased-Arrays including Down-Conversion with Smart Data Fusion for Autonomous Driving

S. Wane[$], B. Kieniewicz[$$], E. Yeap[$], D. Bajon[$], V. Huard[*], I. H. Dunn[$],
Ph. Descamps[#], Ph. Valy[⊥], A. Crofts[T] and Ph. Eudeline[†]
[$]eV-Technologies, France, [$$]EECL, UK, [*]Dolphin Design, France, [#]ESIGELEC-IRSEEM, France,
[⊥]Richardson Electronics, France, [T]Anokiwave, UK, [†]Thales, France

***Abstract*— The combination of cognitive mm-Wave Dual-Beam (DB) MIMO Phased Array systems with optical sensing solutions is proposed, targeting new functionalities for environmental perception and ubiquitous interactions. The resulting paradigms exploit the fusion of mm-Wave and optical sensing solutions to enable emerging technologies facilitating interactions of humans with smart devices and systems in randomly changing environments. Perspectives for autonomous vehicles with Advanced Driver Assistance Systems (ADAS), including Gesture-Recognition (GR), through ubiquitous interactions based on hybrid cognitive mm-Wave RFIC technologies and optical systems, are drawn. Several hardware realizations of mm-Wave phased-arrays are built and co-assembled with optical systems for smart data fusion and real-time signal processing for an autonomous secure decision-making process. A unified modeling and measurement platform is proposed with the concept of Multi-Physics (EM-thermal-mechanical) *Numerical-Co-Simulation-Clone* (NCSC), seen as the counterpart of the functional hardware, which enables 4D (space-time evolution) of augmented reality.**

***Index Terms*—Dual-Beam Phased-Array, Autonomous Driving, MIMO, Cognitive Signal-Processing, 4D, Gesture Recognition, ADAS, Data Fusion, Down-Conversion, Hybrid mmWave and Optical systems.**

I. Introduction

Emerging New-Radio (NR) mobile communication systems are expected to meet challenging requirements for high data rates and wide bandwidths with improved awareness to environmental changes. The associated integration constraints impose global chip-package-PCB-antenna co-design and co-analysis strategies for realizing the required tradeoffs between area constraints, power consumption and broadband RF performance in terms of matching, noise, EMC/EMI and isolation between antenna array elements that are subject to random EM fields exposure. In the near future it is expected that we will witness increased interactions between human beings, devices, machines and tools, which will create new paradigms where *contact-driven* actions will be replaced or extended by g*esture-driven* interactions. In order to support the transition from *contact-driven* actions to g*esture-driven* interactions, a change will be required in the approach and in the technology enablers facilitating the deployment of emerging IoT and artificial-intelligence (AI) devices. *Gesture-driven* interactions will be based on the combination of Near-Field-Communications (NFC) and radar (Far-Field) technologies, which will require hybrid static-dynamic multi-scale approaches.

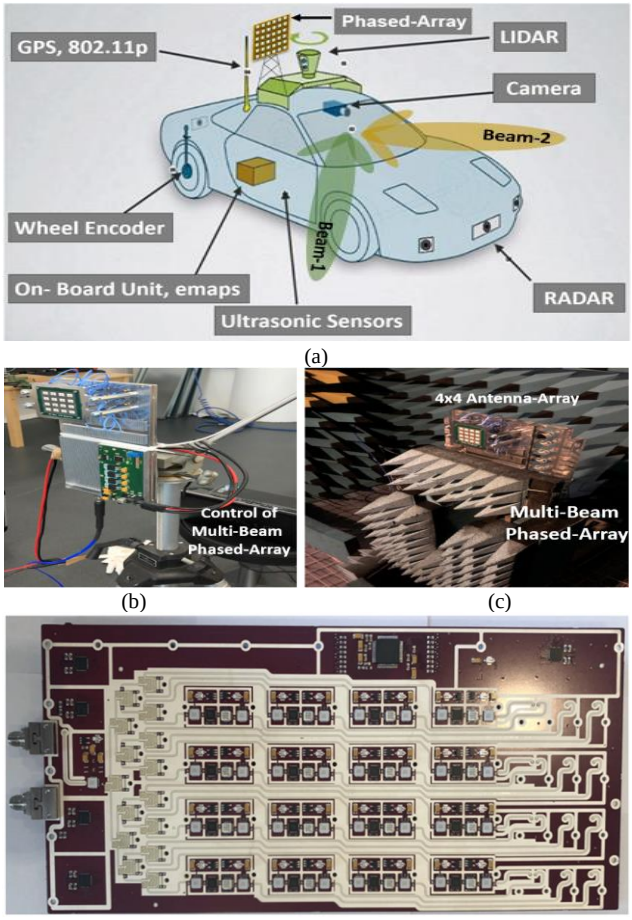

Fig. 1. Autonomous driving vehicle (a) combining optical sensors with. mm-Wave phased-array system (b), (c). Dual-beam mmWave module (d) with 4x4 RF channels.

Agile RF and mm-Wave RFICs offer very attractive features. These features complement classical LIDAR and camera-based technologies in the detection and avoidance of objects, as is needed for ADAS functionality in autonomous vehicles (Fig.1(a)). Hybrid mm-Wave and optical sensing solutions enable radar-based 4D (*space and time*) imaging by cognitive analysis to meet automotive and industrial requirements. Thus, simultaneous detection of distance and velocity for moving target objects can be obtained both horizontally and vertically with smart signal processing. Beyond the simple sensing principle of hybrid mm-Wave and optical technologies, new functionalities can be implemented for environmental perception and

978-1-7281-6192-1/20/$31.00 ©2020 IEEE

ubiquitous interaction following the famous article by Mark Weiser on computer paradigms for the 21st century [1] and the notion of proxemic interactions introduced by Greenberg [2]. The resulting ubiquitous interactions are a function of the desired accessible range, resolution and energy consumption. While static capacitive, resistive and inductive sensing [3] lead to a limited detection range, techniques that rely on propagating waves in the air (*sound, light, or RF & mm-Wave*) can support relatively large detection ranges with beam-steering and beam-forming functionality. mm-Wave technologies remain operational in low-visibility environmental conditions, such as fog, smoke, rain, dust, snow, night, and flare. Fig. 3(a) shows a synoptic view of mmWave MIMO system with down-conversion for low-cost solutions, compliant with existing 3G/4G/5G standards, directly integrable in mobiles devices.

This paper proposes dual-beam (DB) phased-array systems for efficiently coupling cognitive mm-Wave technologies [5-7], including MIMO, with optical sensing solutions to allow for new functionalities for environmental perception and ubiquitous interactions. The proposed hybridization opens new perspectives in the use of ubiquitous interactions including the following emerging applications:

- *Gesture Recognition with ubiquitous interactions.*
- *Human-Machine and Machine-Machine Cooperation.*
- *Cognitive Signal-Processing algorithms.*
- *Energy-Harvesting solutions*

All these applications require the development of advanced stochastic Field-Field Correlation techniques using energy based metrics both in frequency and time domains enabled by smart signal processing solutions.

II. Main Results, Analysis and Discussion

At mm-Wave frequencies, MIMO and phased-array systems can be realized using antenna-in-package, as illustrated in Fig. 3(a), showing a front-end-module (FEM) composed of 4x4 channels with common 2-access terminals for input/output feed to power combiners/splitters.

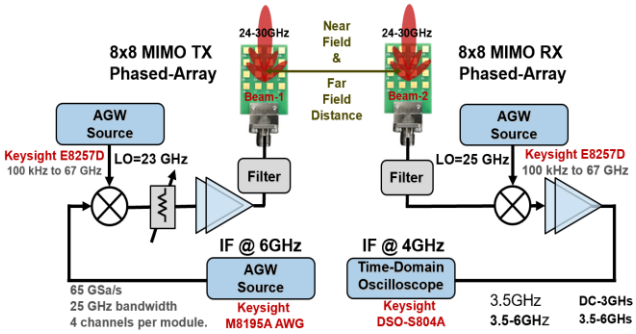

Fig. 2. MIMO beamforming link with smart-antennas including down-conversion for 2x2 beamformer RFICs driving 4x4 Antenna-Array Elements.

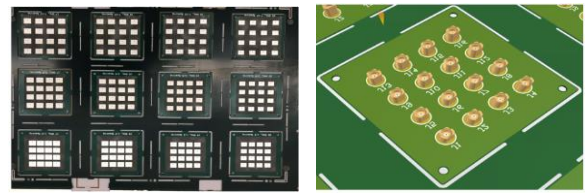

(a)

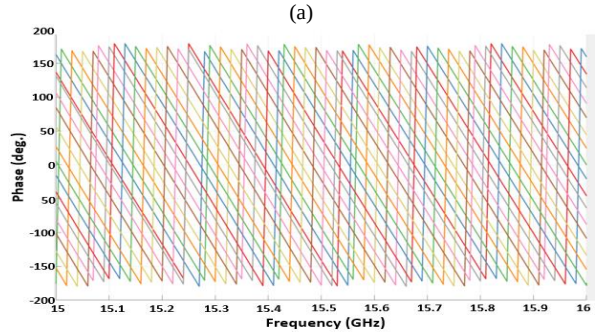

(b)

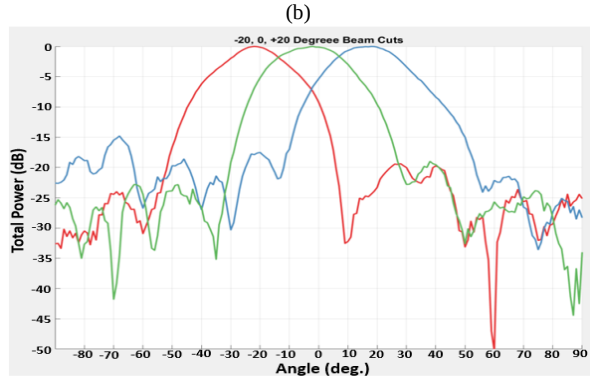

(c)

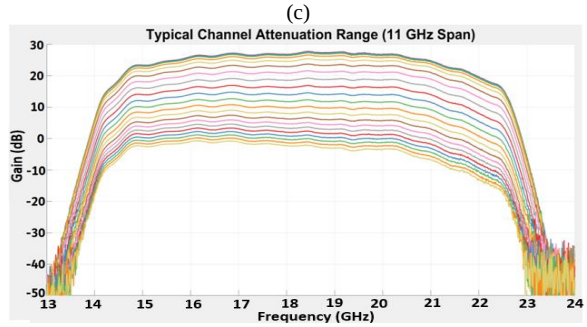

(d)

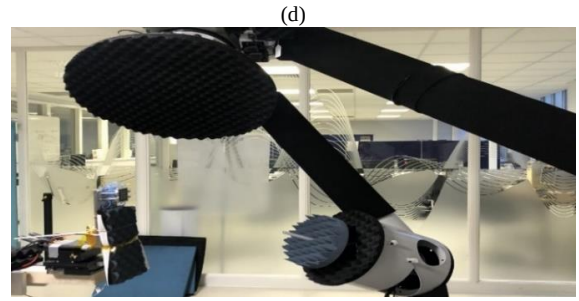

(e)

Fig. 3. (a) Designed, manufactured and experimentally evaluated [8] 4x4 dual-beam antenna-in-package-array. (b) Typical channel-phase-range and (c) -20°, 0, 20° beam cuts. (d) Typical channel attenuation range with 11GHz span. (e) 3D dual-beam measurement solution.

Fig. 2(b) shows RFIC MIMO modules integrating beamformer chips and smart-antenna arrays including down-converters for 5G chip-to-chip communication links. The concept of BIST is proposed for real-time compensation of stochastic changes in the environmental conditions. In Fig. 4 an illustrative hybrid analog-digital beamforming and beam-steering architecture with Nz×Ny antenna array elements, including a BIST control-loop, is shown in V2V communication. Hybrid analog-digital beamforming, when assisted by BIST functionality, offers the required trade-offs between analog performance and digital flexibility with reduced complexity. The BIST-assisted MIMO control includes temperature-dependent dynamic monitoring and adjustment of power-levels. The implementation of BIST-control solutions can be combined with monolithically integrated correlators for real-time estimation of MIMO performance accounting for Field-Field correlations based on energy metrics.

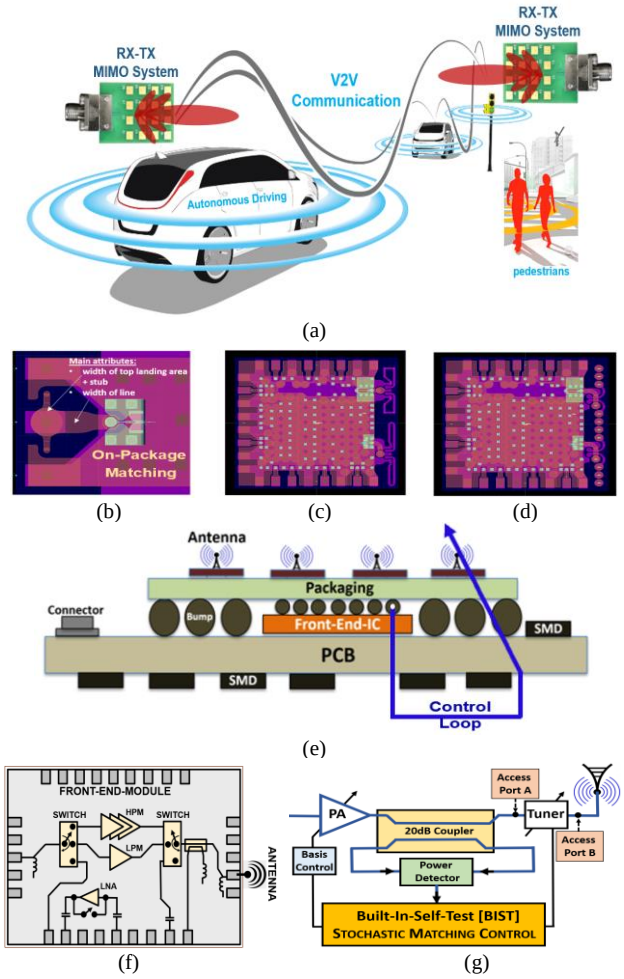

Fig. 4.(a) V2V communication in urban environment. (b) Antenna-in-Package integration solutions with on-package load matching, on-package sensors (c), (d). (e) Chip-package-PCB-antenna integration in WLCSP Technology with BIST control loop. FEMs (f) with load matching compensation (g) and dynamic biasing regulation.

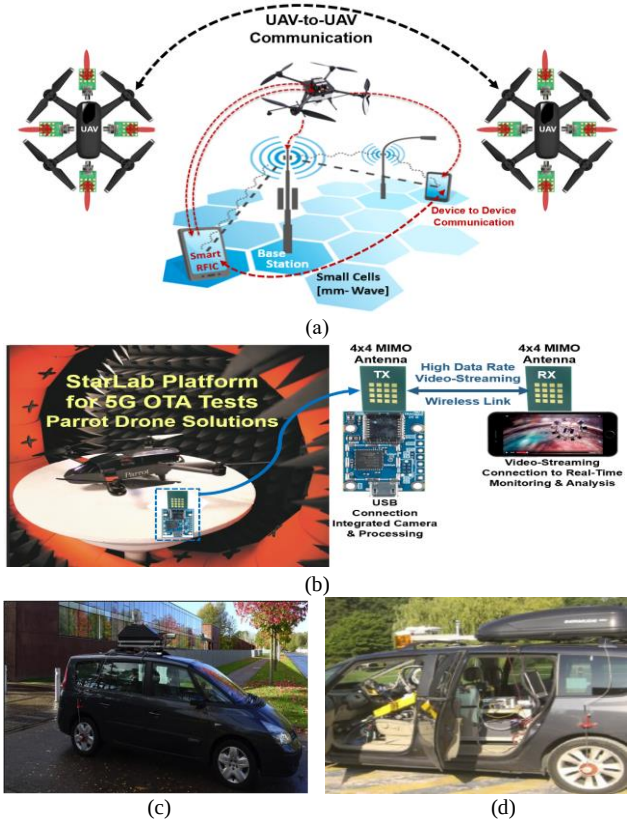

Fig. 5. UAV-based 5G mm-Wave wireless link with high data rate video-streaming capabilities (a) including data fusion in unified 3D maps. Prototype demonstrator of connected UAV (a) and car (c)-(d) toward autonomous driving solution.

Fig. 3(b) and Fig. 3(c) respectively show measured channel-phase-range and -20°, 0, 20° beam-cuts for the dual-beam antenna-in-package system. The measurements are based on a 3D dual-beam platform (Fig. 3(d)) operational in time and frequency domains. Fig. 4 (b), (c), (d), (e), and (f) depict FEM systems with adaptive power-level adjustments for V2V communications. By steering the phased-array beam through digital control, using electronically steered antenna arrays, the system can track not only distance but also the obstacle or target's location in range and azimuth. The autonomous vehicle demonstrator in Fig. 5, developed with ESIGELEC-IRSEEM, will benefit from the hybridization of optical sensors with agile mm-Wave MIMO and phased-array technologies offering the possibility of compact radar chip-package-PCB-antenna co-design to achieve the necessary angular resolution for target localization, object avoidance and gesture recognition in stochastic environments. The proposed dual-beam solution renders possible simultaneous streaming of visual and thermal videos with 4K resolutions using a 2GHz signal bandwidth. Fig. 6 shows a 6-faced dual-beam system with data-fusion capabilities for combining and overlapping video streaming from thermal and visual cameras.

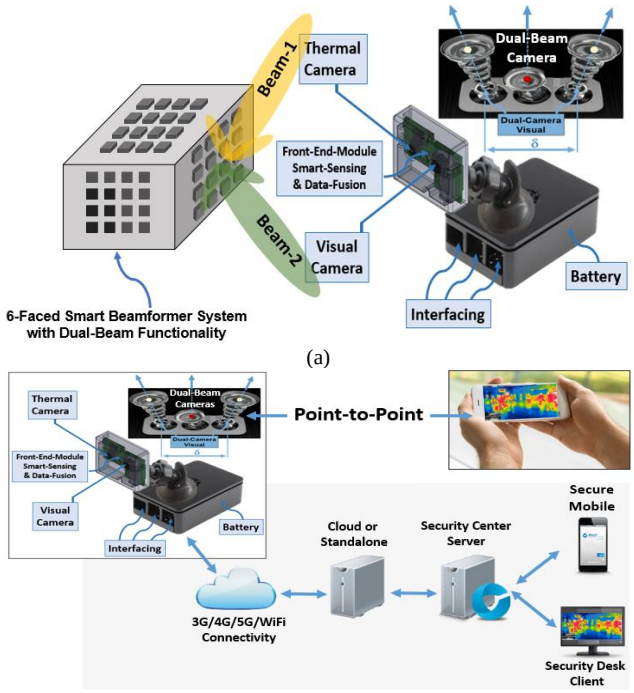

Fig. 6. 6-Faced Smart Dual-Beam System (a) with data-fusion (b) and artificial intelligence.

The data-fusion and correlation, implemented through artificial intelligence algorithms as close as possible to the sensors, allows an automation of the processing in combination with facial recognition and flow analysis [20]. The introduction of data fusion and artificial intelligence will eventually allow a snap of the fingers or even a simple blink of the eye, a change of gaze direction or a slight smile to trigger a desired action. An example of an emblematic application is gesture recognition [21]. Its deployment requires the use of RF/mmWave high-frequency radars, signal processing units and environmental capture units, all of which are based on time-domain analysis. This feature, which we refer to as *gestural recognition* will, for example, allow a wheelchair to be controlled more easily by disabled people. When this gestural recognition is combined with intelligent sensors, enhanced safety is brought to automotive applications with the ability to detect pedestrians, animals or moving obstacles (bicycle, motorcycle, etc.) and finally to remove ambiguities between obstacles. Facial recognition based on 3D visual images can be complemented by 3D thermal images obtained using thermal cameras to integrate emotional information into the data-fusion and correlation analysis. The use of a low-power FDSOI process helps contain the power consumption associated with the signal-processing. Innovative thermal-electrical co-design strategies are proposed for overcoming critical limitations in power-dissipation of mmWave phased-array and radar systems [18-19].

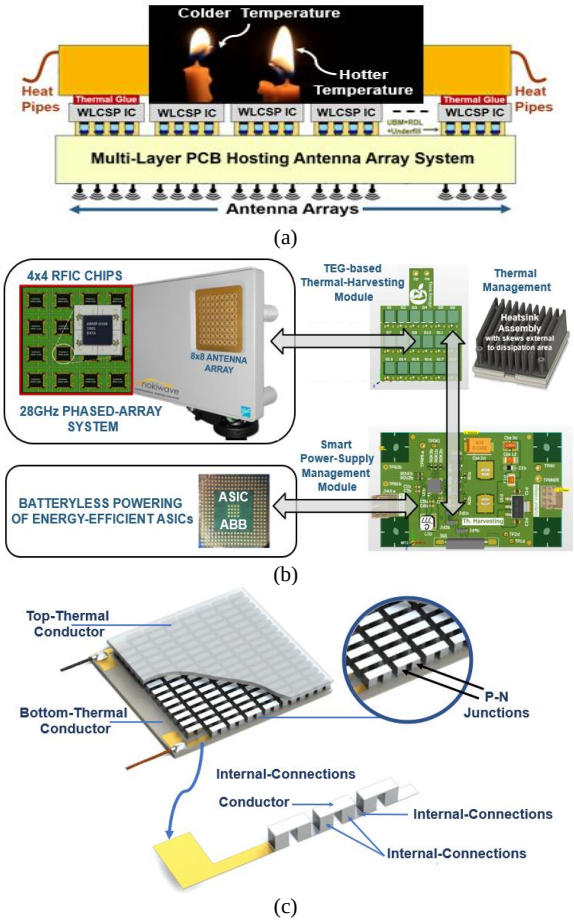

Fig. 7. Thermal-Harvesting solution (a) for RF and mmWave phased-array systems for batteryless (b) powering of energy-efficient ASICs. Seebeck-Module (c) integrating P-N junctions [18-19] for Thermal-Harvesting.

Experimental analysis was conducted to assess thermo-electric conversion performance for mmWave MIMO and phased-array systems operating at 28GHz & 39GHz with Watt-level power dissipation per RFIC channel. Fig. 7 shows a modular thermal-harvesting solution developed to enable batteryless powering of energy-efficient ASICs. Co-design of RF and optical FEMs with energy-harvesting functionality is proposed in advanced FDSOI technologies for Smart-IoT and Cognitive-mmWave applications [22-29]. Nanomaterial engineering will yield further developments beyond the performances of present thermo-electric generators.

III. Conclusion

A hybrid combination of smart mm-Wave and optical sensing technologies for enabling a new paradigm in interactions of humans with smart devices and systems in randomly changing environments was proposed. Practical applications of this approach in autonomous vehicles, including machine learning, smart data fusion and cognitive co-array signal processing, were addressed.

Perspectives for FD-SOI technology based RFIC photonics were drawn for multi-beam optical MIMO and phased-array technologies implementing BIST techniques with EM-thermal harvesting and adaptive-biasing regulation using advanced FDSOI technologies. The concept of Macro-Pixel introduced in [7] can be favorably combined with co-array signal processing for bringing cognition to RF front-end-modules. Use of innovative material engineering will contribute in driving the selection of appropriate physical properties for optimizing electrical, thermal and mechanical design performance metrics through distributed EM-thermal-mechanical co-design. This co-design approach is facilitated by a unified modelling and measurement platform enabling virtual prototyping based on the concept of Numerial Co-Simulation-Clone (NCSC) of the functional hardware counterpart to push systems to their ultimate performance.

ACKNOWLEGMENT

Helpful review and discussions with Dr. Oren Eliezer are gratefully acknowledged.

REFERENCES

[1] M. Weiser, “The computer for the 21st century”, SIGMOBILE Mob. Comput. Commun. Rev. 3, July 1999.

[2] S. Greenberg, et al.. “Proxemic Interactions: The New Ubicomp?” In: Interactions 18.1 (Jan. 2011), pp. 42–50. issn: 1072-5520. doi: 10.1145/1897239.1897250.

[3] T. Grosse-Puppendahl, “Capacitive Sensing and Communication for Ubiquitous Interaction and Perception” Ph.D. thesis, Technische Universität Darmstadt, Germany, 2015.

[4] J. Lien, et al., “Soli: Ubiquitous gesture sensing with millimeter wave radar”. ACM Transactions on Graphics (TOG), 2016.

[5] S. Wane and N. Aflakian, “Photonics Chip-to-Chip Communication for Emerging Technologies: Requirements for Unified RF, mm-Waves and Optical Sensing”, IEEE Texas Symposium on Wireless and Microwave Circuits and Systems, 2019.

[6] S. Wane, “Thermo-Electric Harvesting and Co-Design Strategies Toward Improved Energy Efficiency of Emerging Wireless Technologies”, IEEE Texas Symposium on Wireless and Microwave Circuits and Systems, 2018.

[7] S. Wane, et al., “Cognitive Beamformer Chips with Smart-Antennas for 5G and Beyond: Holistic RFSOI Technology Solutions including ASIC Correlators”, in proceedings of European Microwave Week, Paris, 2019.

[8] B. Kieniewicz, “Development of an Analogue Phased Array Beamformer for Wide Ku/K Band Applications”, ARMMS 2019.

[9] Bich-Yen Nguyen, Philippe Flatresse, et al., “A Path to Energy Efficiency and Reliability for ICs: Fully Depleted Silicon-on-Insulator (FD-SOI) Devices Offer Many Advantages”, IEEE Solid-State Circuits Magazine (Volume: 10 , Issue: 4 , Fall 2018).

[10] S. Wane, R. Patton, and N. Gross, “Unification of instrumentation and EDA tooling platforms for enabling smart chip-package-PCB-probe arrays co-design solutions using advanced RFIC technologies,” in IEEE Conf. on Antenna Measurements Applications, Sept 2018, pp. 1–4.

[11] A. T. Moffet, “Minimum-redundancy linear arrays,” IEEE Trans. Antennas Propagat., vol. AP-16, pp. 172-175, Mar. 1968.

[12] S. W. Lang, et al., “Array design for MEM and MLM array processing,” in Proc. ICASSP-81, pp. 145-148, Mar. 1981.

[13] E. Vertatschitsch and S. Haykin, “Nonredundant arrays,” Proc. of the IEEE, 74 (1):217, vol. 74, p. 217, Jan. 1986.

[14] S. R. De Graaf and D. H. Johnson, “Optimal linear arrays for narrow-band beamforming,” Proc. IEEE lCASSP-84, pp. 40.8.1-40.8.4, Mar. 1984.

[15] C. Ji, R.T. Hoctor, and S.A. Kassam, ”Elliptical boundary arrays for coherent and incoherent imaging,” Proc. Ins. Elec. Eng., Series F: Radar and Signal Processing, vol. 136, pp. 210-220, Oct. 1989.

[16] L. C. Godara and D. A. Grey, “An algorithm for adaptive aug-mented array beamforming,”. Acoustical Soc. Am., vol. 83, pp. 2261-2265, June 1988.

[17] S. U. Pillai and F. Haber, “Statistical analysis of a high resolution spatial spectrum estimator utilizing an augmented covariance matrix,” IEEE Trans. Acoustics, Speech, Signal Processing, vol. ASSP-35, pp. 1517-1523, Nov. 1987.

[18] S. Wane, “Thermo-electric harvesting and Co-Design strategies toward improved energy efficiency of emerging wireless technologies”, Texas Symposium on Wireless and Microwave Circuits and Systems, 2018.

[19] D.J. Paul, "*Thermoelectric Energy Harvesting*" Intech Open Access from "*ICT - Energy - Concepts Towards Zero - Power Information and Communication Technology* " (2014) - DOI: 10.5772/57347.

[20] Patent application no. FR2005713, “3D IR & Visual Cameras Correlator Module with Artificial Intelligence”, 2020.

[21] Stefan Poslad, "Ubiquitous Computing: Smart Devices, Environments and Interactions", first published:31 March 2009. Print ISBN:9780470035603.

[22] A. Cathelin, “Fully depleted silicon on insulator devices CMOS: the 28-nm node is the perfect technology for analog, RF, mmW, and mixed-signal system-on-chip integration”. IEEE SolidState Circuits Mag. 9(4), 18–26 (2017).

[23] A. Cathelin, RF/analog and mixed-signal design techniques in FD-SOI technology, in 2017 IEEE Custom Integrated Circuits Conference (CICC) (IEEE, Piscataway, 2017).

[24] P. Flatresse, B. Giraud, et al., Ultra-wide body-bias range LDPC decoder in 28nm UTBB FDSOI technology, in IEEE International Solid-State Circuits Conference Digest of Technical Papers, February (2013), pp. 424–425.

[25] Bich-Yen Nguyen, Philippe Flatresse, et al., “A Path to Energy Efficiency and Reliability for ICs: Fully Depleted Silicon-on-Insulator (FD-SOI) Devices Offer Many Advantages”, IEEE Solid-State Circuits Magazine (Volume: 10 , Issue: 4 , Fall 2018).

[26] S. Clerc, T. Di Gilio, A. Cathelin, “*The Fourth Terminal, Benefits of Body-Biasing Techniques for FDSOI Circuits and Systems”*, Series on Integrated Circuits and Systems, Springer Nature Switzerland, 2020.

[27] T. Kuroda, T. Fujita, et al., “A 0.9V 150MHz 10mW 4mm/sup 2/2-D discrete cosine transform core processor with variable-threshold-voltage scheme”, in 1996 IEEE International Solid-State Circuits Conference. Digest of Technical Papers, ISSCC (1996), pp. 166–167. https://doi.org/10.1109/ISSCC.1996.488555.

[28] F. Arnaud, S. Clerc, S. Haendler, R. Bingert, P. Flatresse, V. Huard, T. Poiroux, “Enhanced design performance thanks to adaptative body biasing technique in FDSOI technologies”, in 2017 IEEE SOI-3D-Subthreshold Microelectronics Technology Unified Conference (S3S), Oct 2017, pp. 1–5.

[29] Patent application no. FR1915810, “*Régulation Intelligente des Performances de Composants, Circuits et Systèmes Intégrés incluant des Dispositifs Auto-Tests et une Gestion de l'Efficacité Énergétique*” –"*Adaptive Body Biasing for Smart Thermal-Electrical Harvesting and Built-in-Self-Test (BIST) Control and Regulation of RF performances including Stochastic Antenna Tuning*", 2019.